SCHOTTKY DIODES

SS32---SS310

FEATURES

Low forward voltage
High current capability
Low power loss, high efficiency
For use in low voltage high frequency inverters, freewheeling, and polarity protection applications
Guarding for overvoltage protection

MECHANICAL DATA

SMC (DO-214AB) molded plastic body
Polarity: color band denotes cathode end
Mounting Position: Any

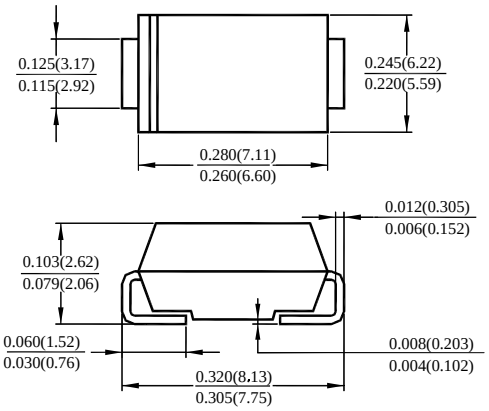

Dimensions in inches and (millimeters)
DO-214AB (SMC)

MAXIMUM RATINGS AND ELECTRICAL CHARACTERISTICS

Ratings at 25 ^{o}C ambient temperature unless otherwise specified. Single phase, half wave, 60 Hz, resistive or inductive load. For capacitive load, derate current by 20%.

Parameter		Symbol	SS32	SS33	SS34	SS35	SS36	SS38	SS39	SS310	Unit
Maximum Repetitive Peak Reverse Voltage		V_{RRM}	20	30	40	50	60	80	90	100	V
Maximum RMS Voltage		V_{RMS}	14	21	28	35	42	56	63	70	V
Maximum DC Blocking Voltage		V_{DC}	20	30	40	50	60	80	90	100	V
Maximum Average Forward Rectified Current at T_L = 90 ^{O}C		$I_{F(AV)}$	3								A
Peak Forward Surge Current, 8.3 ms Single Half Sine Wave Superimposed on Rated Load (JEDEC method)		I_{FSM}	100								A
Maximum Forward Voltage at 3 A 1)		V_F	0.5			0.75		0.85			V
Maximum DC Reverse Current at Rated DC Blocking Voltage	T_J = 25 ^{O}C	I_R	0.5								mA
	T_J = 125 ^{O}C		20			10					
Typical Thermal Resistance		$R_{\theta JL}$	17								$^{O}C/W$
Operating Junction Temperature Range		T_j	- 55 to + 125								^{O}C
Storage Temperature Range		T_{stg}	- 55 to + 150								^{O}C

1) Pulse test: 300 µs pulse width, 1% duty cycle

SS32---SS310 Typical Characteristics

FIG.1 – FORWARD DERATING CURVE

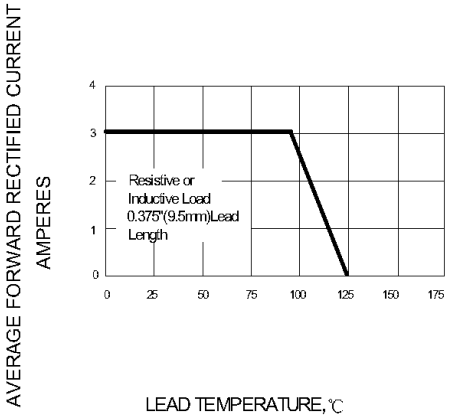

FIG.2 – PEAK FORWARD SURGE CURRENT

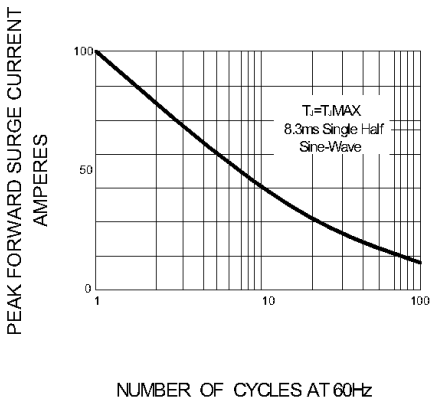
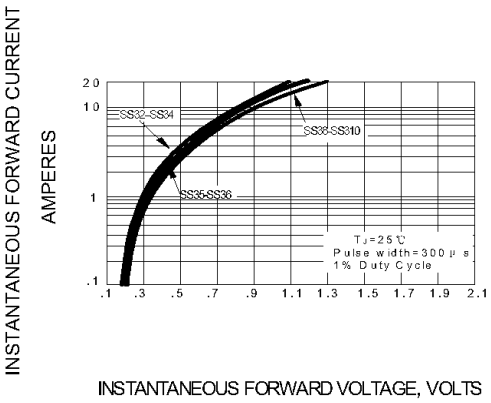
FIG.3 – TYPICAL INSTANTANEOUS FORWARD CHARACTERISTICS